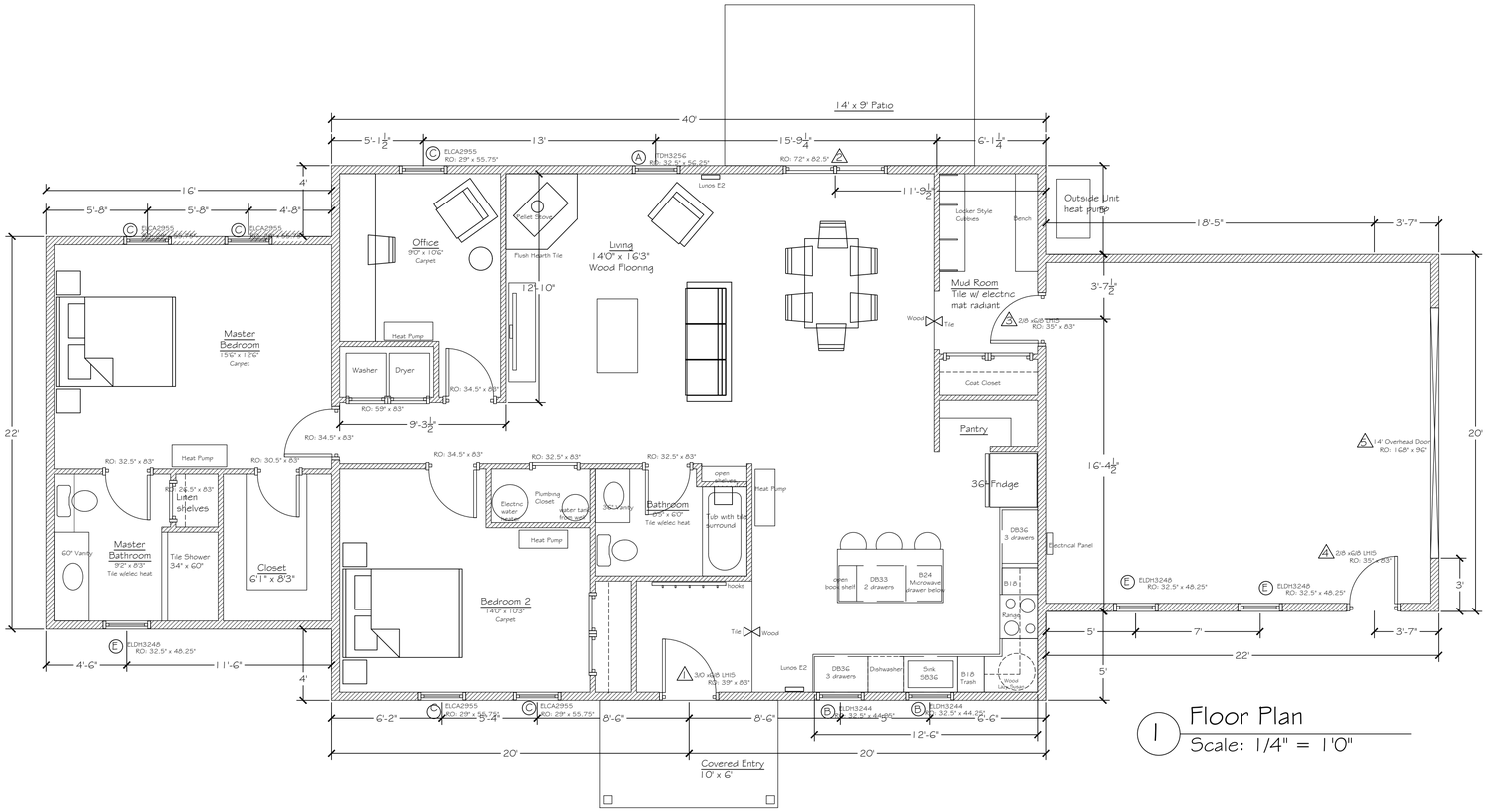

1 Floor Plan
Scale: 1/4" = 1'0"

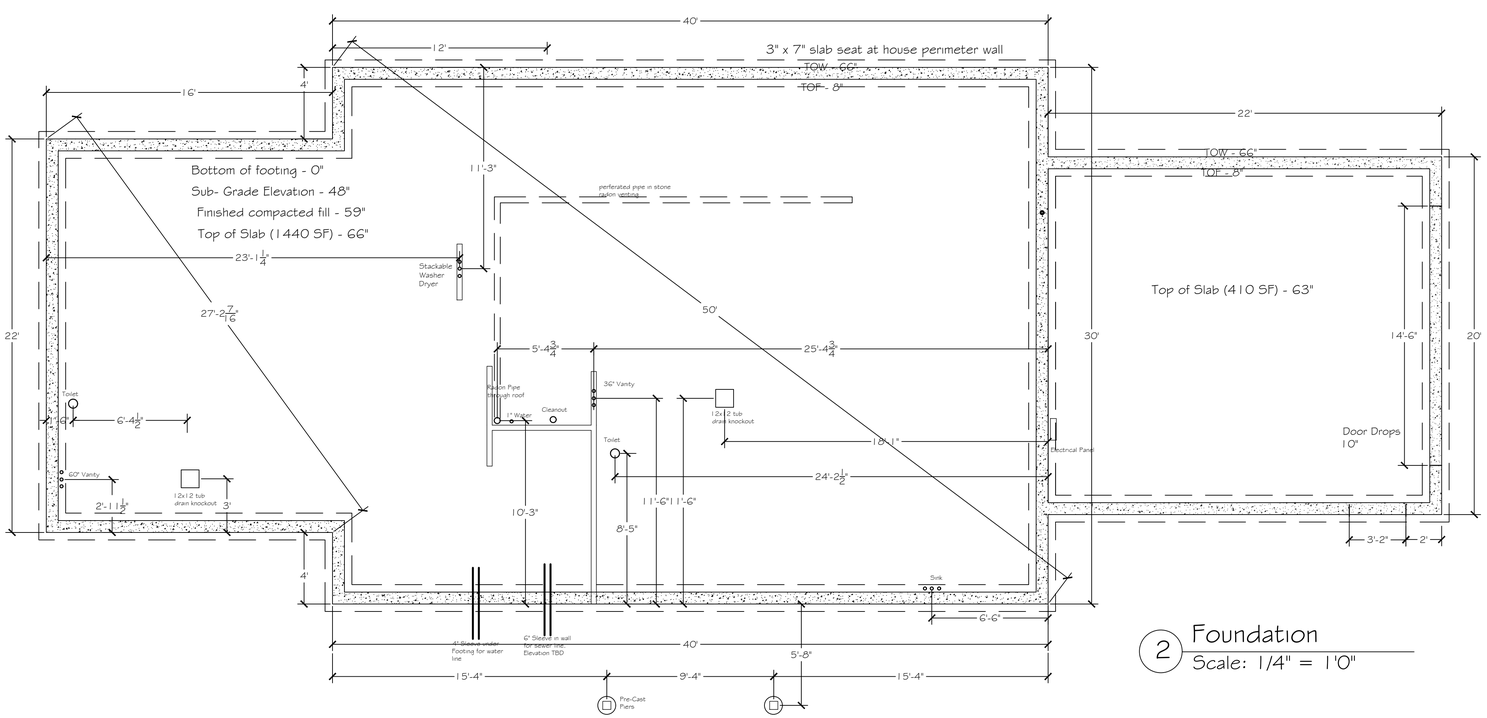

2 Foundation
Scale: 1/4" = 1'0"

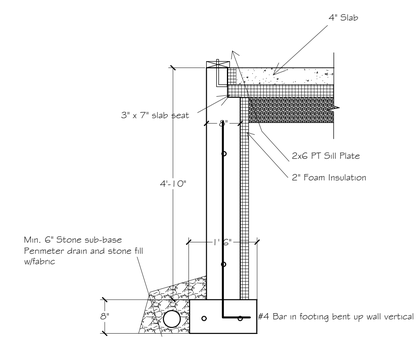

Typical wall Detail

3 Foundation Detail
Scale: no scale

autodesk®
Architectural
Desktop

Labrador Builders
Kingsbury Companies

Estes One Story

New House
Airport Road

House 5

PROJECT NUMBER:	
ISSUED:	10/25/23
DRAWN BY:	KRB
CHECKED BY:	---
FILENAME:	estes one story.DWG

S1.1